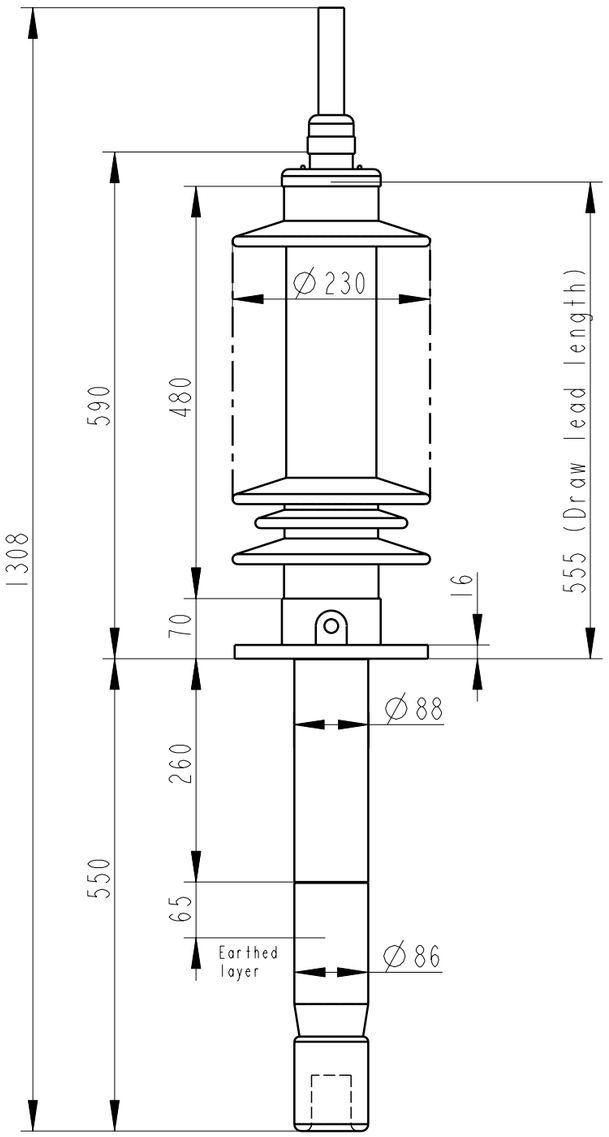

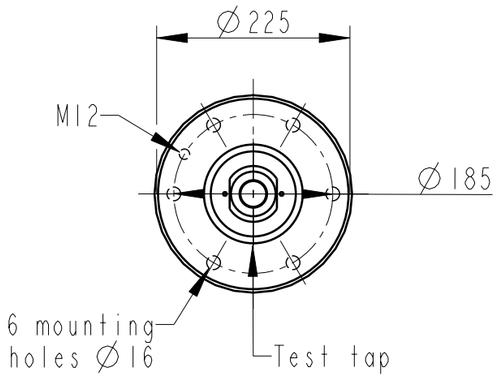

OUTER TERMINAL

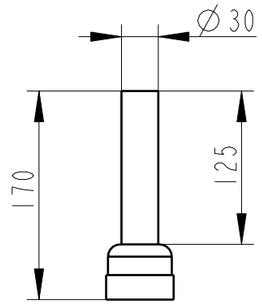

INNER TERMINAL FOR STRANDED CABLE

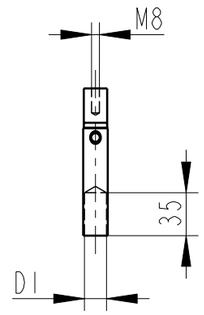

END SHIELD

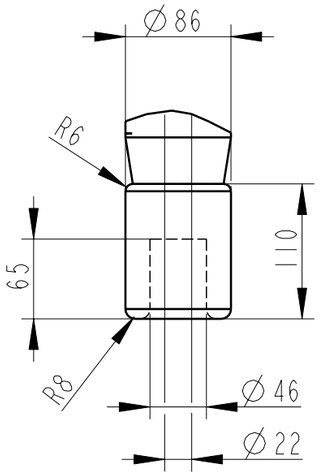

SOLID ROD CONNECTOR

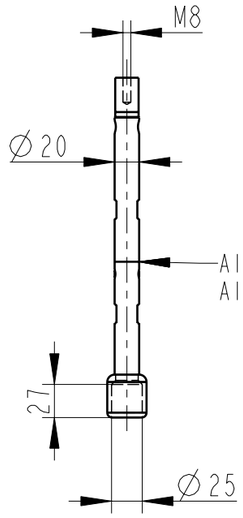

The solid rod can be divided either:
Alt.1: 20mm below the bushing flange or
Alt.2: 20mm below the upper end of the bottom porcelain

Bushing Data:

Rated Voltage	52	kV
Phase to Ground Voltage	52	kV
Dry Lightning Impulse 1,2/50µs	250	kV
Wet power frequency AC	105	kV
Routine test 1min dry 50Hz	120	kV
Rated Current	800	A
Creepage Distance	1500±50	mm
Creepage Distance Protected	580	mm
Mass	25	kg

Ordering Data:

BUSHING — COLOUR AIR INSULATOR

LF123015-M — BROWN

-N — LIGHT GREY

OUTER TERMINAL

LF 170 002-A — Cu, Ø30, L=125

LF 170 001-A — Al, Ø30, L=125

OTHER TYPES ON REQUEST

INNER TERMINAL FOR STRANDED CABLE

For brazing	Conductor area	D1
LF 170 011-S	up to 150mm²	Ø18
LF 170 011-U	Undrilled with pilot hole Ø5	

For crimping or brazing	Conductor area	D1
LF 170 010-M	50mm²	Ø11
LF 170 010-N	70mm²	Ø13
LF 170 010-L	95mm²	Ø15

SOLID ROD CONNECTOR

LF 170 019 -D for Alt.1

LF 170 019 -B for Alt.2

ABB Components Ludvika, Sweden

No.
Ur/Uy kV Ir A 50/60 Hz
LI / SI / AC kV
M kg L mm V
C1 pF Tan δ %
C2 pF Tan δ %

Based on	Reg. No.	Title: GOB 250-800-0.3 WITHOUT OIL LEVEL GAUGE LONG END SHIELD	
Prepared: Lövnord	Responsible department: COM/BK		Language: 82
Approved: Johansson	Take over department		
Design engineering review: Hedlund	Database		Page: 1(1)
ABB Components		Document No. 2751369-112	

We reserve all rights in this document and in the information contained therein. Reproduction, use or disclosure to third parties without express authority is strictly forbidden. ©ABB